Schwergaengigkeit des Gewindes durch Oberflaechenbeschichtung zulaessig /
slow thread engagement caused by the surface finish permissible

Gewindedurchzug kann nur mit lehrenhaltiger M5 Schraube geprueft werden /
the thread strength can only be tested with a calibrated M5 screw gauge

Vor Auslegung einer automatisierten Verarbeitung des Teils sollte Rueckspracche mit Fa. ARaymond gehalten werden.
Fully automatic processing of the part requires prior consultation with ARaymond.

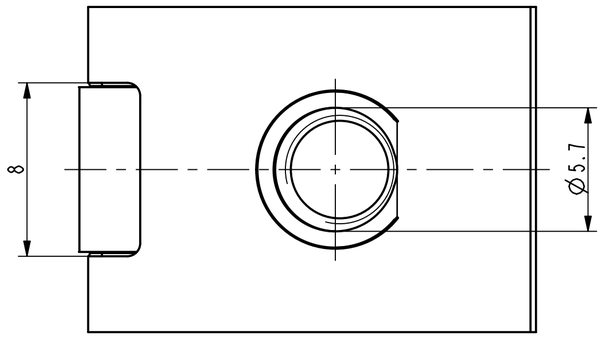

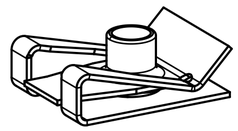

Isometrische Ansicht /
isometric view
2:1

http://www.cergy-vis.fr
[CERGY-VIS]
ET SI ON PARLAIT SERVICE

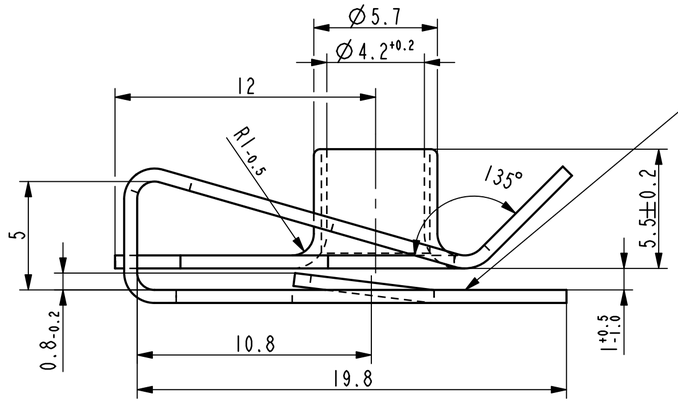

Ueberbrueckung der Oeffnung durch Oberflaechenbeschichtung zulaessig /
surface finish bridging permissible

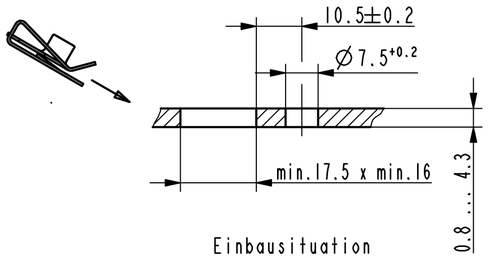

Einbausituation
assembly situation
1:1

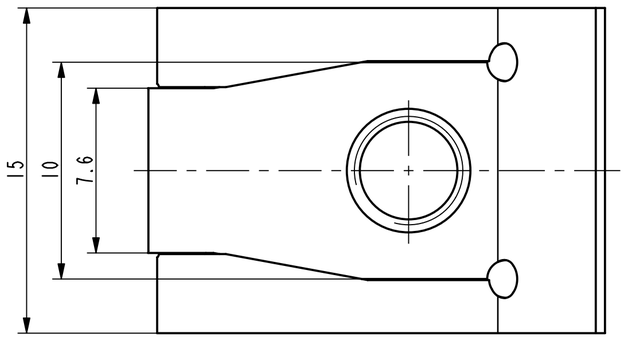

Rev.	Anzahl/ quantity	Aenderungsbeschreibung / modification description	Datum/date	Name
-	-	-	-	-
-	-	-	-	-
-	-	-	-	-
-	-	-	-	-
-	-	-	-	-
-	-	-	-	-
-	-	-	-	-
-	-	-	-	-
Ae	1x	Oberflaechenvariante hinzugefuegt	06.11.13	mj
Ad	-	Zeichnung ueberarbeitet nach AR-Gruppenstandard, Teil unveraendert	27.01.12	Br

ARaymond
A RAYMOND GmbH & Co.KG
Teichstrasse 57
Germany - 79511 Loerrach
Phone +49 (0) 7621 174-0
Fax +49 (0) 7621 174-225

Bei Verstaendnisproblemen beantragen Sie bitte beim Absender die deutsche Fassung vor jeder Anwendung.
"CONDITIONS OF USE"
This drawing and all information (the "Drawing") disclosed are the exclusive property of ARaymond.
By using this Drawing the Addressee acknowledge and accept that this Drawing
(1) is covered by ARaymond' intellectual property rights or know-how and
(2) is provided under the following conditions who represent a Deposit Agreement.
This Drawing is for Addressee' internal use only limited to its estimation.
Without prior written consent of ARaymond, no permission or rights for any purpose, is hereby granted, such as, without any limitation,
(1) the copy, in part or entirely
(2) and/or the presentation, in part or entirely, to any other third party outside the Addressee' company or in the company but with no interest
(3) and/or the distribution of the Drawing, in part or entirely, in any medium
(4) and/or the creation of any derivative work.
In case of breach of these conditions, Addressee shall indemnify ARaymond from and against all damages (compensatory or consequential), costs, expenses and charges, caused or arising out of or attributable to its wilful misconduct, fraud, negligence, infringement of ARaymond' intellectual property rights. If the Addressee does not accept these conditions, please notify ARaymond' sender immediately.

Intellectual property rights	vorbehalten / all rights reserved	Classification code	AABCB
Ersatz fuer/ substitue for	016205-0/Ac/21.12.2009	Entw.Ref./ dev.ref.	Projekt-Nr./ project no.
Maszstab/ scale: 5:1	Format: A2	Allgemeintoleranz/ general tolerance: ±0.3 / ±5°	Datum/ date: 27.01.2012
			Erstellt von/ prepared by: Breitenfeld
Projektion / projection	ALL DIMENSIONS ARE IN MILLIMETERS	Freigegeben/ approved: 20131108060822	
	Blechdicke/ mat. thickness DIN EN 10140: 0.60	Volumen/ volume (mm³): 405.3	Gewicht/ weight (g): 3.2
Oberfl./ finish	metallhaltige Korrosionsschutzbeschichtung, Farbe silber, GZ metallic corrosion protection coated, colour silver, lubricated		Oberfl. Code/ finish code: 5442
Werkstoffbehandl./ material treatment	zwischenstufenverguetet / austempered 365 ... 465 HV 5		
Werkstoff/ material	C45E DIN EN 10132-3		Mat. code: 1040
Benennung/ title	Blechmutter fuer Gewinde M5 sheet metal nut for thread M5		
Teil-Nr./ part no.	016205-0-03		Drawing type: C:Customer
Kundenteile-Nr. / customer part no.	-		Blatt / sheet: 1 / 1
CAD system & version	ProE WF4	Dateiname / filename	016205-0C00

	Teil-Nr. / part no.	Oberflaeche / Farbe / finish / colour	Oberfl. Code/ finish code
Ae	016205-0-07	metallhaltige Korrosionsschutzbeschichtung, Farbe schwarz, GZ metallic corrosion protection coated, colour black, lubricated	9999
	016205-0-06	metallhaltige Korrosionsschutzbeschichtung, Farbe schwarz metallic corrosion protection coated, colour black	5550
	016205-0-05	metallhaltige Korrosionsschutzbeschichtung, Farbe silber, GZ metallic corrosion protection coated, colour silver, lubricated	4004
	016205-0-04	verzinkt / passiviert farblos zinc plated / passivated colourless	3250

Ausfuehrung / Execution