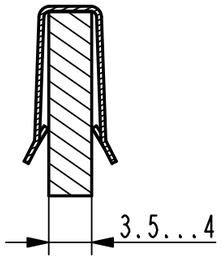

Einbausituation / assembly situation 2:1

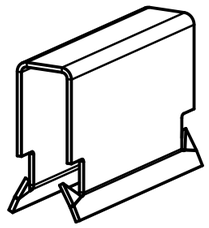

3D-Darstellung / isometric view 2:1

http://www.cergy-vis.fr
[CERGY-VIS]
ET SI ON PARLAIT SERVICE

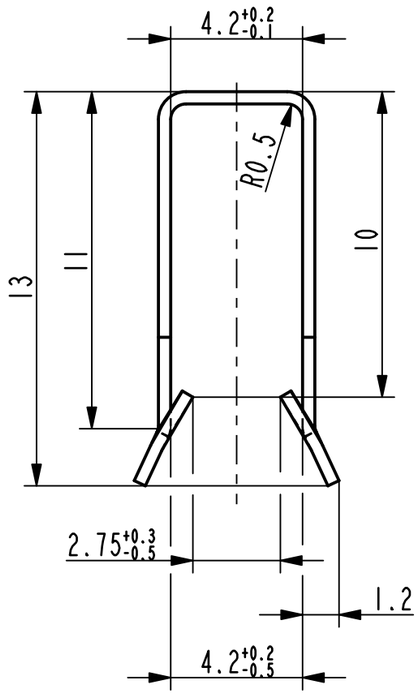

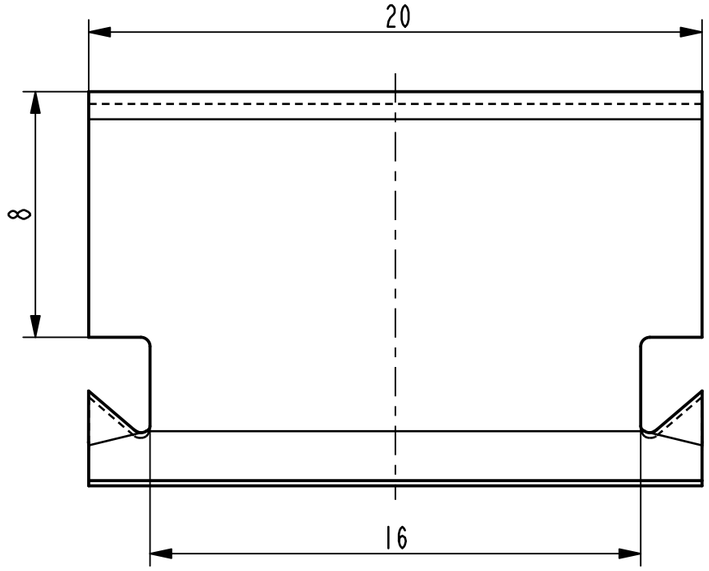

Vor Auslegung einer automatisierten Verarbeitung des Teils sollte Ruecksprache mit Fa. A.Raymond gehalten werden.
Fully automatic processing of the part requires prior consultation with A.Raymond GmbH.

Rev.	Anzahl/ quantity	Aenderungsbeschreibung / modification description	Datum/date	Name
-	-	-	-	-
-	-	-	-	-
-	-	-	-	-
-	-	-	-	-
-	-	-	-	-
-	-	-	-	-
-	-	-	-	-
-	-	-	-	-
Ab	1x	Oberflaechenvariante 05 (5550) hinzugefuegt; Oberflaechen-	11.05.11	Eb
-	-	variante 01 (3300) entfernt	-	-

ARaymond
MORE THAN FASTENING
Teichstrasse 57
Germany - 79511 Loerrach
Phone +49 (0) 7621 174-0
Fax +49 (0) 7621 174-225

Bei Verstaendnisproblemen beantragen Sie bitte beim Absender die deutsche Fassung vor jeder Anwendung.
"CONDITIONS OF USE"
This drawing and all information (the "Drawing") disclosed are the exclusive property of A.Raymond.
By using this Drawing the Addressee acknowledge and accept that this Drawing
(1) is covered by A.Raymond' intellectual property rights or know-how and
(2) is provided under the following conditions who represent a Deposit Agreement.
This Drawing is for Adressee' internal use only limited to its estimation.
Without prior written consent of A.Raymond, no permission or rights for any purpose, is hereby granted, such as, without any limitation,
(1) the copy, in part or entirely
(2) and/or the presentation, in part or entirely, to any other third party outside the Addressee' company or in the company but with no interest
(3) and/or the distribution of the Drawing, in part or entirely, in any medium
(4) and/or the creation of any derivative work.
In case of breach of these conditions, Addressee shall indemnify A.Raymond from and against all damages (compensatory or consequential), costs, expenses and charges, caused or arising out of or attributable to its willful misconduct, fraud, negligence, infringement of A.Raymond' intellectual property rights. If the Addressee does not accept these conditions, please notify A.Raymond' sender immediately.
Intellectual property rights: vorbehalten / all rights reserved

Classification code	CCA--		
Ersatz fuer/ substitue for	013126_C_01/Aa/22.06.2006	Entw.Ref./ dev.ref.	
Projekt-Nr./ project no.			
Maszstab/ scale	5:1	Format	A3
Allgemeintoleranz/ general tolerance	±0.3 / ±5°	Datum/ date	11.05.2011
Erstellt von/ prepared by	Ebner		
Projektion / projection		ALL DIMENSIONS ARE IN MILLIMETERS	
Freigegeben/ approved	20110511082629		
Blechdicke/ mat. thickness DIN EN 10140	0.40	Volumen/ volume (mm³)	228.5
Gewicht/ weight (g)	1.8		
Oberfl./ finish	metallhaltige Korrosionsschutzbeschichtung, Farbe schwarz metallic corrosion protection coated, colour black	Oberfl. Code/ finish code	5441
Werkstoffbehandl./ material treatment	zwischenstufenverguetet / austempered 435 ... 535 HV 5		
Werkstoff/ material	C67S DIN EN 10132-4	Mat. code	1000
Benennung/ title	U-Klammer edge clip		
Teil-Nr./ part no.	013126-0-02	Drawing type	C:Customer
Kundenteile-Nr. / customer part no.	-	Blatt / sheet	1 / 1
CAD system & version	ProE WF4	Dateiname / filename	013126-0C00

	Teil-Nr. / part no.	Oberflaeche / Farbe / finish / colour	Oberfl. Code/ finish code
Ab	013126-0-05	metallhaltige Korrosionsschutzbeschichtung, Farbe schwarz metallic corrosion protection coated, colour black	5550
	013126-0-04	verzinkt / passiviert farblos zinc plated / passivated colourless	3250
	013126-0-03	metallhaltige Korrosionsschutzbeschichtung, Farbe schwarz metallic corrosion protection coated, colour black	5451

Ausfuehrung / Execution